Circuit Analysis (Lab 7)

Experiment 7: Analysis of Operational Amplifiers Operations

Name: **Talha Yousaf** **Registration No:** **2025-CE-93**

Date: 04-May-2026 **Grade and Signature:** **……**

CLO4	Construct amplifiers with operational amplifiers.			
Psychomotor/ Affective	**Level1 (1)**	**Level2 (2-3)**	**Level3 (4-5)**	**Level4 (6-7)**
Report Marks (3)			**Total marks (10)**	

Objective

The objective of this lab is to investigate the input to output relationship for inverting and non-inverting amplifiers.

Apparatus Required

Sr. No.	Apparatus	Range	Quantity
1	Regulated Power Supply	Standard	1
2	Signal Generator	Standard	1
3	Oscilloscope	Standard	1
4	Digital Multimeter	Standard	1
5	Breadboard & Wires	Standard	As Required
6	Resistors	1k Ω, 2k Ω ,3k Ω	3

Description

Operational amplifiers can be used in two basic configurations to create amplifier circuits. One is the inverting amplifier where the output is the inverse or 180° out of phase with the input, and the other is the non-inverting amplifier where the output is in the same sense or in phase with the input.

Both operational amplifier circuits are widely used and they find applications in different areas. When an operational amplifier or op-amp is used as a non-inverting amplifier it only requires a few additional components to create a working amplifier circuit.

Pin configuration of IC 741 op amp is shown below

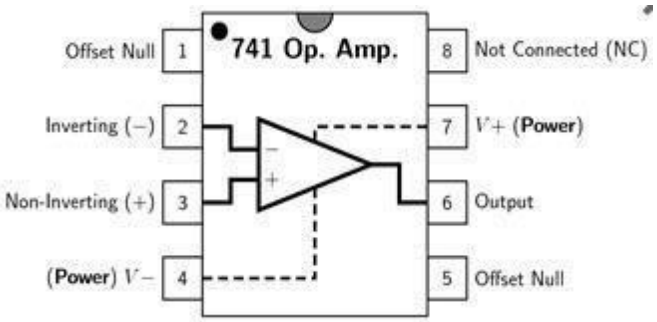

- Pin 1 is offset null.
- Pin 2 is inverting input terminal.
- Pin 3 is a non-inverting input terminal.
- Pin 4 is negative voltage supply (VCC)
- Pin 5 is offset null.
- Pin 6 is the output voltage.
- Pin 7 is positive voltage supply (+VCC)
- Pin 8 has no connection.

Precautions:

1. Voltage control knob should be kept at minimum position.
2. Current control knob of RPS should be kept at maximum position.
3. Carefully utilize the oscilloscope channels and function generator.

Procedure for Inverting Amplifier:

1. Wire up the circuit as shown in the figure below on the breadboard.
2. Give the input to the inverting terminal of the op-amp and simultaneously display the input and output on the oscilloscope.
3. Draw the input & output waveforms at the end of the lab.

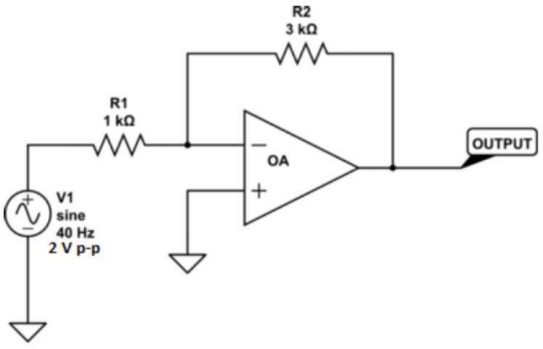

Procedure for Non-Inverting Amplifier:

1. Wire up the circuit as shown in the figure below on the breadboard.
2. Give the input to the non-inverting terminal of the op-amp and simultaneously display the input and output on the oscilloscope.
3. Draw the input & output waveform at the end of the lab.

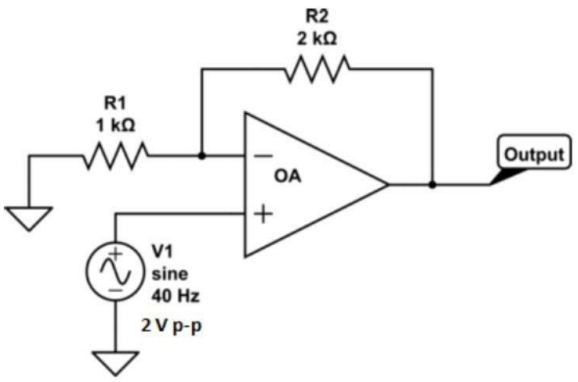

Result:

2V

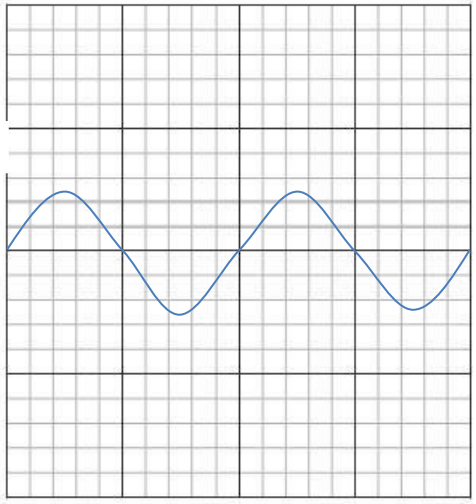

Figure 7: Input Voltage Signal

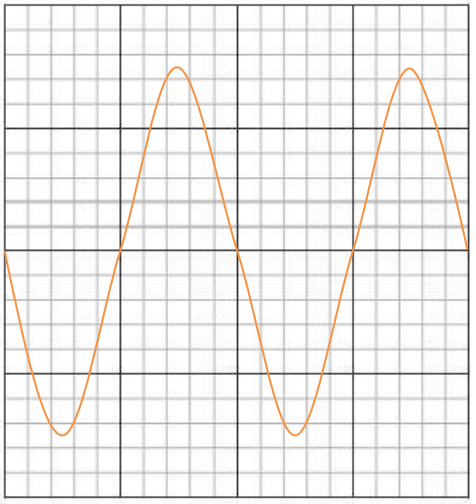

Figure 8: Inverted Output

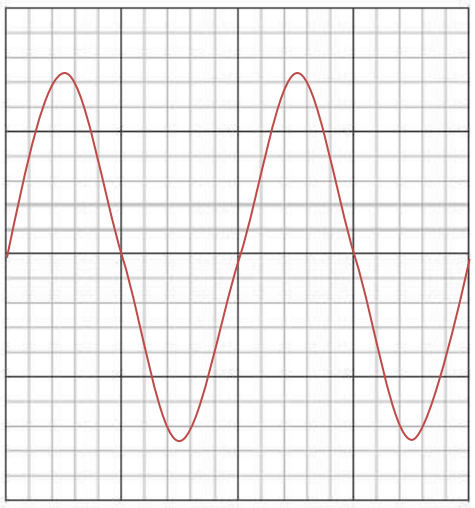

Figure 9: Non-Inverting Output

Post Lab Questions

1. **Define inverting amplifier.**

   An inverting amplifier is an operational amplifier circuit where the input signal is applied to the negative (-) terminal. Its primary function is to amplify the signal while reversing its phase by 180 degrees. This means if the input goes up, the output goes down.

2. **Define Non-inverting amplifier.**

   A non-inverting amplifier is a circuit where the input signal is connected to the positive (+) terminal of the Op-Amp. It increases the strength of the signal without changing its polarity. The output signal remains "in phase" with the input signal, meaning they both move in the same direction.

3. **What are the applications of inverting amplifiers?**

   • **Summing Amplifiers:** Used to combine multiple voltage signals into a single output.

   • **Phase Shifters:** Employed in communication systems where a 180-degree phase change is required.

   • **Integration/Differentiation:** Used in analog signal processing to perform mathematical calculus operations on signals.

4. **What are the applications of non-inverting amplifiers?**

   • **Voltage Buffers:** Used to isolate different stages of a circuit due to their very high input impedance.

   • **Signal Conditioning:** Ideal for amplifying weak sensor signals without flipping the waveform.

- **Audio Preamps:** Commonly used in sound equipment to boost low-level audio signals while maintaining original clarity.

5. **What is gain of an amplifier?**

   Gain is a mathematical ratio that measures the ability of an amplifier to increase the magnitude of an input signal. It is calculated by dividing the output signal (voltage, current, or power) by the input signal. It essentially tells you how many times the amplifier has multiplied the original signal.

6. **How do you calculate the gains for inverting and non-inverting amplifiers?**

   The gain (Av) of these amplifiers is determined by the ratio of the feedback resistor (Rf) and the input resistor (Rin):

   - **Inverting Gain:** It is calculated using the formula Av = -Rf/Rin. The negative sign indicates the phase inversion.
   - **Non-Inverting Gain:** It is calculated using the formula Av = (1 + Rf/Rin). The result is always positive and will always be at least 1.